7. Rear Drive Shaft

A: REMOVAL

1) Disconnect the ground cable from the battery.
2) Lift up the vehicle, then remove the rear wheels.
3) Flatten the tab of the axle nut.

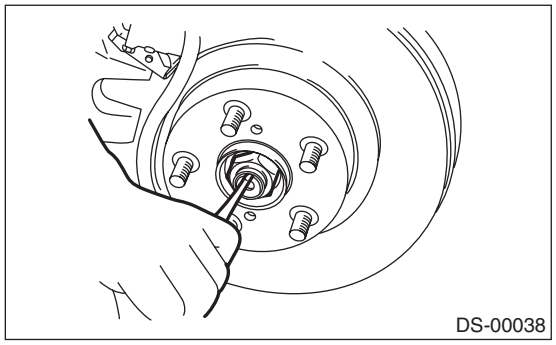

4) While applying the parking brake, remove the axle nut using a socket wrench.

CAUTION:
Remove the axle nut while there is no load being applied to the axle.

5) Remove the rear stabilizer link.
- Except for STI model

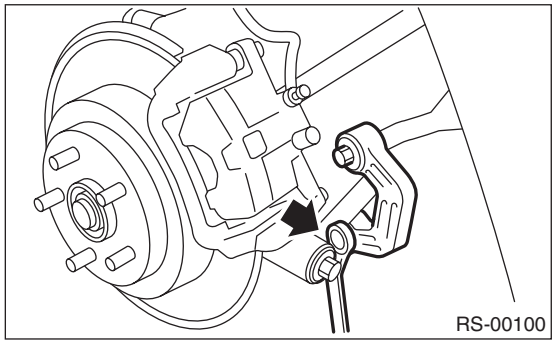

- STI model

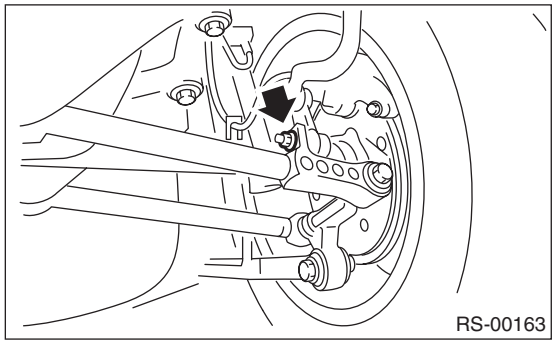

6) Remove the bolts which secure the trailing link to the housing.

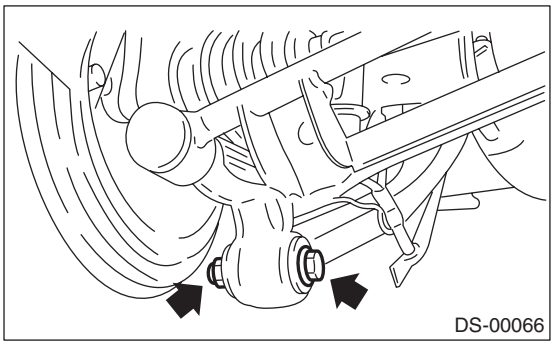

7) Remove the bolts which secure the front and rear lateral link to the housing.

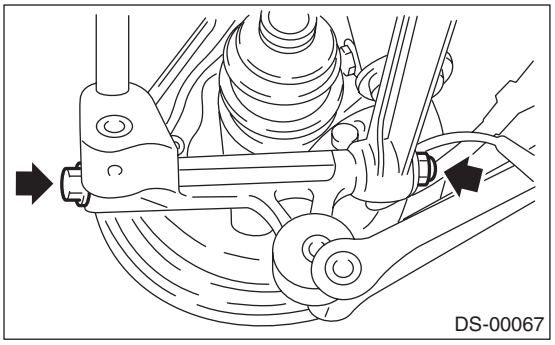

8) Remove the rear ABS wheel speed sensor from the back plate.

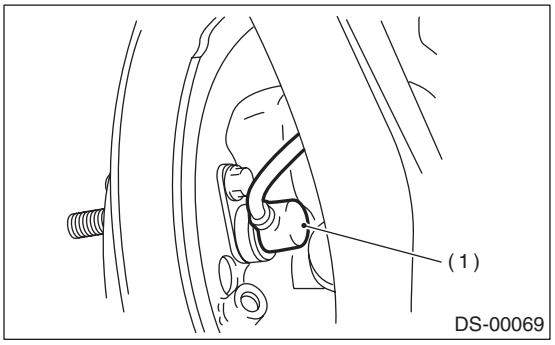

(1) ABS wheel speed sensor

9) Remove the rear drive shaft from the rear axle. If it is hard to remove, remove the brake disc rotor and use ST1 and ST2.
ST1 926470000 AXLE SHAFT PULLER
ST2 28099PA110 AXLE SHAFT PULLER PLATE

CAUTION:
- **Do not hammer drive shaft when removing.**
- **Do not let the oil seal or tone wheel be damaged.**

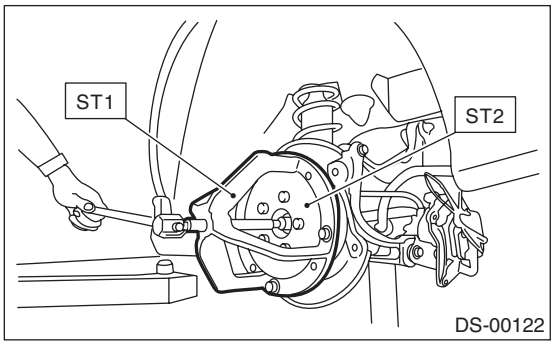

10) Remove the rear drive shaft from the rear differential by using the ST.
ST 28099PA100 DRIVE SHAFT REMOVER

NOTE:
As shown in the figure, set the ST to the bolt (A) without damaging the side bearing retainer.

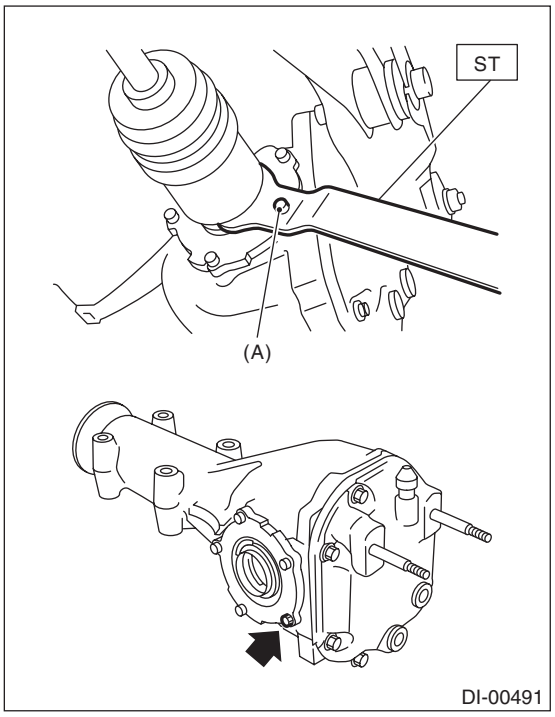

(A) Bolt

B: INSTALLATION

1) Insert the rear drive shaft into the rear axle.
2) Tighten the axle nut temporarily.
3) Using the ST, install the rear drive shaft to the rear differential.
ST 28099PA090 OIL SEAL PROTECTOR

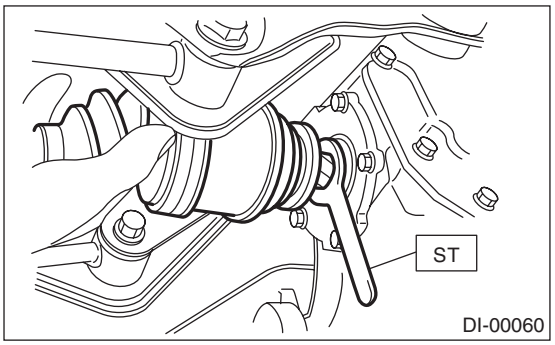

4) Using new self-locking nuts, temporary tighten the front and rear lateral links to the housing.

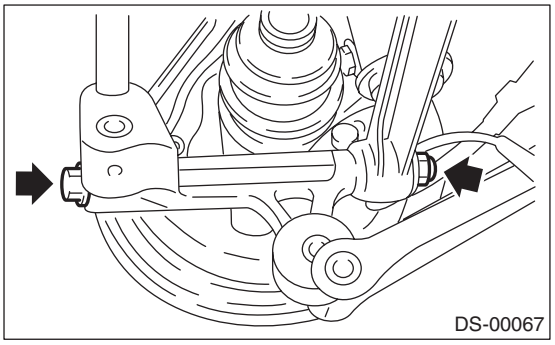

5) Using new self-locking nuts, temporary attach the trailing link to the housing.

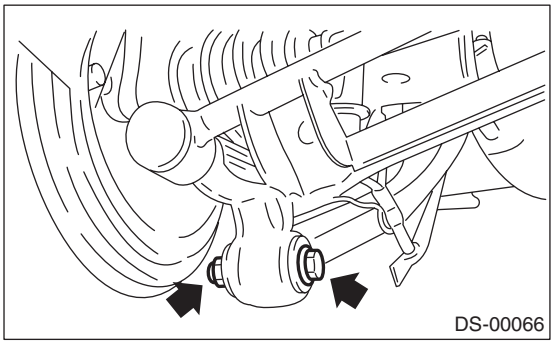

6) Install the stabilizer link.

Tightening torque:
45 N·m (4.5 kgf-m, 33.2 ft-lb)

- Except for STI model

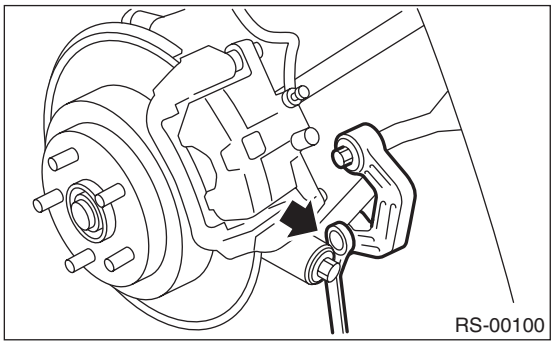

- STI model

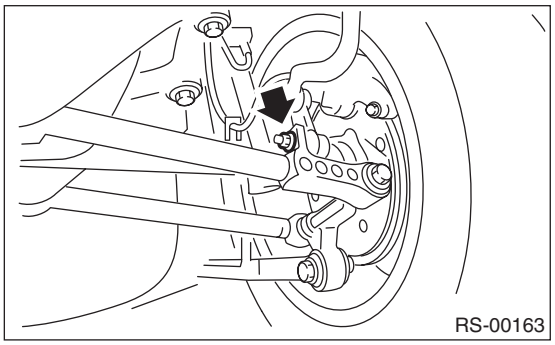

7) Install the ABS wheel speed sensor.

Tightening torque:
32 N·m (3.3 kgf-m, 24 ft-lb)

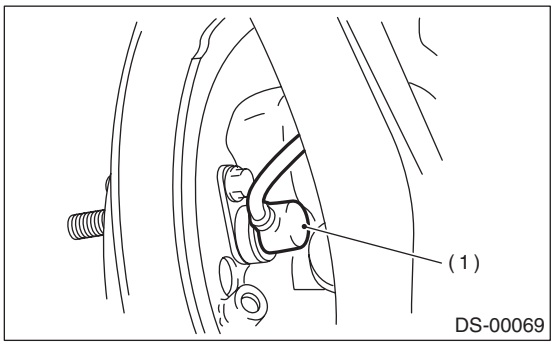

(1) ABS wheel speed sensor

8) Using ST1 and ST2, pull the rear drive shaft to the required location.

ST1 922431000 AXLE SHAFT INSTALLER
ST2 927390000 ADAPTER

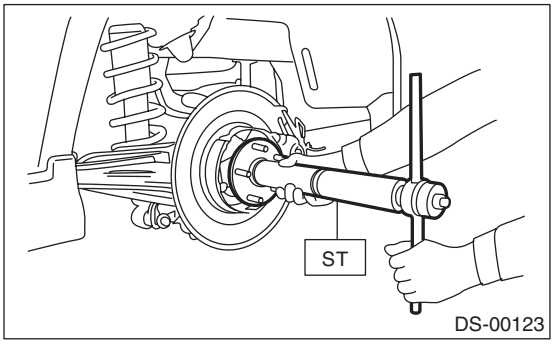

9) While applying the parking brake pedal, tighten the new axle nut to the specified torque.

Tightening torque:
190 N·m (19.4 kgf-m, 140 ft-lb)

10) Lock the axle nut securely.

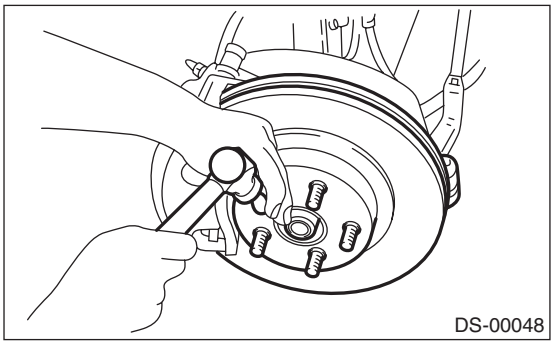

11) Install the wheel.

Tightening torque:
100 N·m (10.2 kgf-m, 73.8 ft-lb)

12) Make the tires completely touch the ground.

CAUTION:
Always tighten the stabilizer bushing in the state where the vehicle is at curb weight and the wheels are in full contact with the ground.

13) Tighten the rear housing assembly and lateral link assembly installation bolts.

Tightening torque:
140 N·m (14.3 kgf-m, 103 ft-lb)

14) Tighten the rear housing assembly and trailing link assembly installation bolts.

Tightening torque:
90 N·m (9.2 kgf-m, 66 ft-lb)

C: DISASSEMBLY

1) Straighten the bent claw at the larger end of the DOJ boot.
2) Loosen the band by means of a flat tip screwdriver or pliers, being careful not to damage the boot.

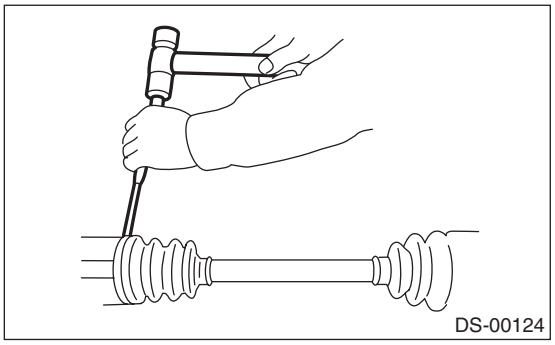

3) Remove the boot band on the small end of DOJ boot in the same manner.
4) Remove the larger end of DOJ boot from DOJ outer race.
5) Pry and remove the round circlip at the neck of DOJ outer race with a screwdriver.

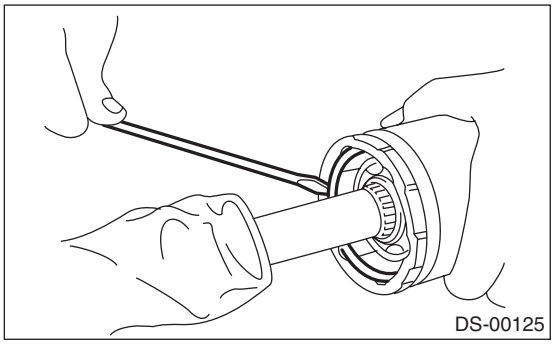

6) Take out the DOJ outer race from the shaft assembly.
7) Wipe off the grease and take out the ball bearings.

NOTE:
- The grease is a special grease (grease for constant velocity joints). Do not mix with other greases.
- Disassemble exercising care not to lose balls (6 pcs).

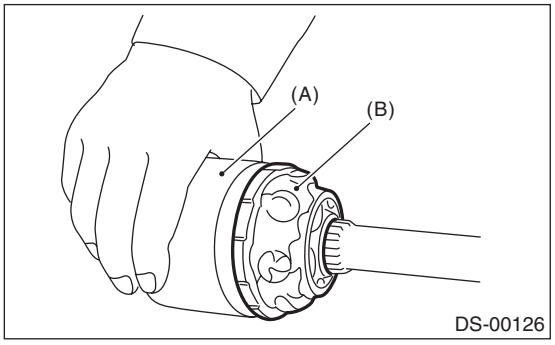

(A) Outer race
(B) Grease

8) To remove the cage from inner race, turn the cage by a half pitch to the track groove of inner race and shift the cage.
9) Using pliers, remove the snap ring fixing the inner race to the shaft.
10) Take out the DOJ inner race.
11) Take off the DOJ cage from shaft and remove the DOJ boot.
12) Wrap vinyl tape around the spline part of shaft.
13) Remove the EBJ boot using the same procedures as for the DOJ boot.

NOTE:
The EBJ is a non-disassembly part, so the axle disassembly stops here.

D: ASSEMBLY

NOTE:
Use specified grease.

EBJ side
NTG2218-M (Part No. 28395AG010)

DOJ side:
Except for STI model
NKG205 (Part No. 28495AG000)

EDJ side:
STI model
NKG205 (Part No. 28495AG010)

1) Install the EBJ boot to the specified position, and fill it with 60 to 70 g (2.12 to 2.47 oz) of specified grease.
2) Place the DOJ boot at the center of shaft.
3) Wrap vinyl tape around the spline part of shaft.
4) Insert the DOJ cage onto shaft.

NOTE:
Insert the cage with the cutout portion facing the shaft end, since the cage has an orientation.

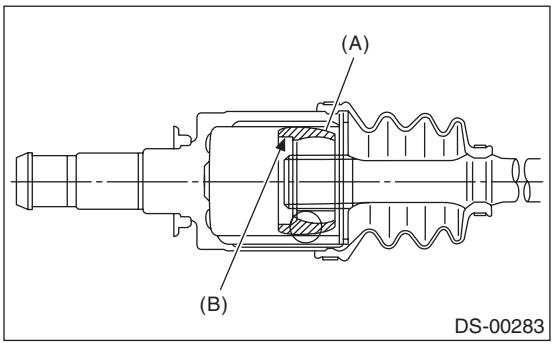

(A) Cage
(B) Cutout portion

5) Install the DOJ inner race on shaft and fix the snap ring in place with pliers.

NOTE:
Confirm that the snap ring is completely fitted in the shaft groove.

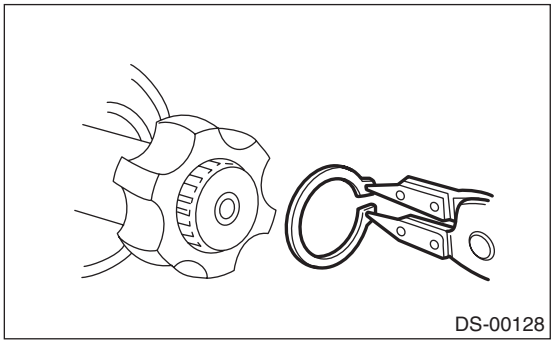

6) Install the removed cage, to the inner race fixed onto the shaft.

NOTE:
Fit the cage with the protruding section aligned with the track on the inner race, and turn by a half pitch.

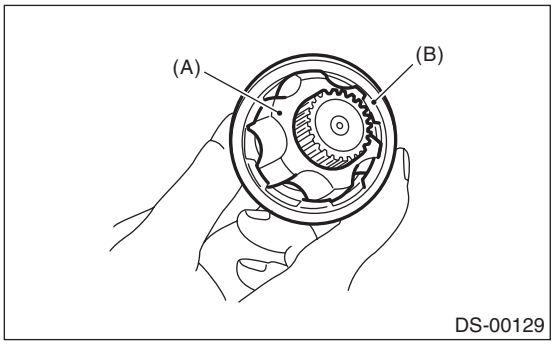

(A) Inner race
(B) Cage

7) Fill 80 to 90 g (2.82 to 3.17 oz) of specified grease into the inner side of the DOJ outer race.
8) Apply a thin coat of specified grease to the cage pocket and six ball bearings.
9) Insert the six ball bearings into the cage pocket.
10) Align the outer race track and ball positions, and place the shaft, inner race, cage and ball bearings in the original positions, and then fix outer race in place.

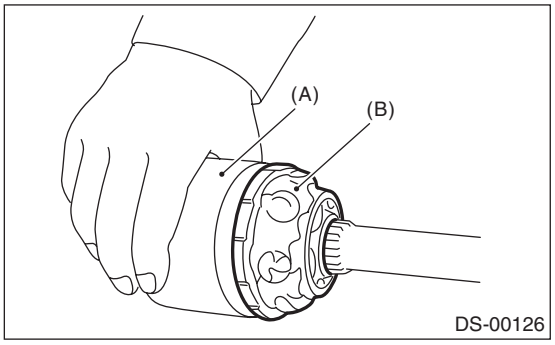

(A) Outer race
(B) Grease

11) Install the snap ring in the groove on the DOJ outer race.

NOTE:
- Assure that the balls, cage and inner race are completely fitted in the outer race of DOJ.
- Use care not to place the matched position of snap ring in the ball groove of outer race.
- Pull the shaft lightly and assure that the circlip is completely fitted in the groove.

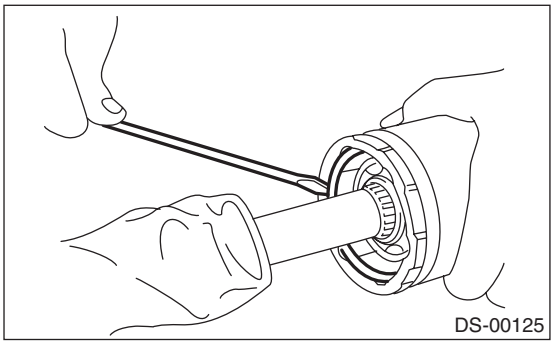

12) Apply an even coat of the specified grease [20 to 30 g (0.71 to 1.06 oz)] to the entire inner surface of boot. Also apply grease to the shaft.
13) Install the DOJ boot taking care not to twist it.

NOTE:
- The inside of the larger end of DOJ boot and the boot groove shall be cleaned so as to be free from grease and other substances.
- When installing the DOJ boot, position the outer race of DOJ at center of the stroke.

14) Put a new band through the clip and wind twice in the band groove of the boot.

NOTE:
When tightening boot, use care so that the air within the boot is appropriate.
15) Tighten the band using the ST.
ST 925091000 BAND TIGHTENING TOOL

NOTE:
Tighten the band until it cannot be moved by hand.

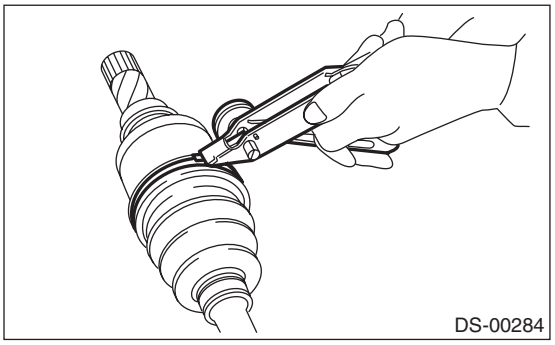

16) Tap the clip with the punch provided at the end of the ST.
ST 925091000 BAND TIGHTENING TOOL

NOTE:
Tap to an extent that the boot underneath is not damaged.

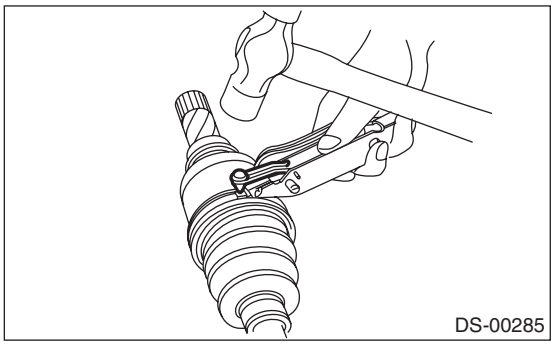

17) Cut off the band with an allowance of about 10 mm (0.39 in) left from the clip and bend this allowance over the clip.

NOTE:
Be careful so that the end of the band is in close contact with clip.
18) Install EBJ boot in the same manner.
19) Extend and retract the DOJ repeatedly to provide an equal coating of grease.

E: INSPECTION

Check the removed parts for damage, wear, corrosion etc. Repair or replace if defective.
1) DOJ (Double Offset Joint)
Check for seizure, corrosion, damage, wear and excessive play.
2) EDJ (High-efficiency compact double offset joint)
Check for seizure, corrosion, damage, wear and excessive play.
3) Shaft
Check for excessive bending, twisting, damage and wear.
4) EBJ (High-efficiency compact ball fixed joint)
Check for seizure, corrosion, damage, wear and excessive play.
5) Boot
Check for wear, warping, breakage and scratches.
6) Grease
Check for discoloration and fluidity.